Braytron

FISA TEHNICA

MODEL	BT65-01082
DESCRIERE	BRY-FLOOD-PF-10W-GRY-3IN1-IP65-LED FLOODLIGHT





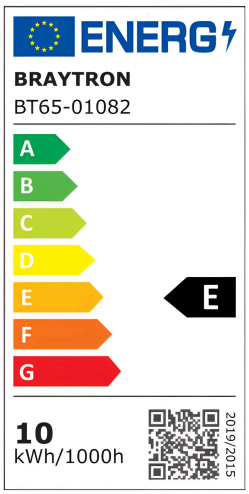

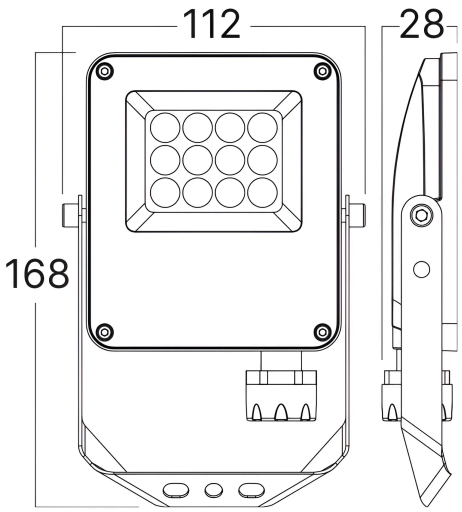

BRAYTRON SRL

MUNICIPIUL BUCUREȘTI, SECTOR 6, BLD. IULIU MANIU, NR.616, CORP B, ET.1, Sector 6, București
info@braytron.com
www.braytron.com

Braytron

FISA TEHNICA

General Characteristics

Model No	:	BT65-01082
Main Family	:	Outdoor Lighting
Sub Family	:	LED Floodlight
Type	:	Floodlight
Body Color	:	Grey
Lamp Shape	:	Non-Directional
Dimmable	:	Not-Dimmable
Light Source	:	LED
Warranty	:	2 Years
Class	:	CLASS I
IP	:	IP65

Product Characteristics

Wattage	:	10
Color Temperature	:	3IN1
Quse Lumen	:	1100
Color Rendering Index (CRI)	:	≥80
Energy Efficiency Level	:	E
Beam Angle	:	90^0

Electrical Characteristics

Lifetime	:	20000 h
Voltage	:	220-240V 50/60Hz
Power Factor	:	>0,5
Material	:	Aluminium
Working Temperature	:	-20^0C ~ $+40^0$C

Dimensions & Weight

P. Length	:	150 mm
P. Width	:	109 mm
P. Height	:	26 mm
Weight	:	215 gr

Package Informations

N.W.	:	8,6 kgs
G.W.	:	10,4 kgs
PCS/CTN	:	40
Length	:	35 cm
Width	:	25 cm
Height	:	37,5 cm
EAN	:	5949097743177

BRAYTRON SRL

MUNICIPIUL BUCUREȘTI, SECTOR 6, BLD. IULIU MANIU, NR.616, CORP B, ET.1, Sector 6, București
info@braytron.com
www.braytron.com