Braytron

FISA TEHNICA

MODEL	BT65-09882
DESCRIERE	BRY-FLOOD-PF-300W-GRY-3IN1-IP65-LED FLOODLIGHT





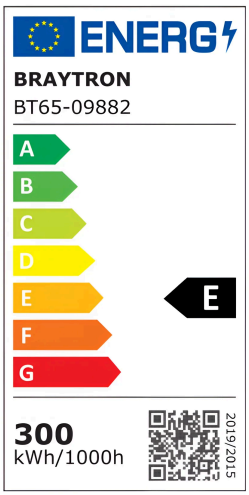

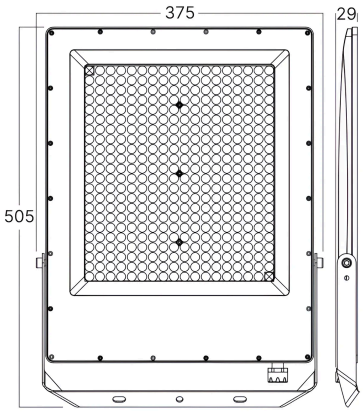

BRAYTRON SRL

MUNICIPIUL BUCUREȘTI, SECTOR 6, BLD. IULIU MANIU, NR.616, CORP B, ET.1, Sector 6, București
info@braytron.com
www.braytron.com

Braytron

FISA TEHNICA

General Characteristics

Model No	:	BT65-09882
Main Family	:	Outdoor Lighting
Sub Family	:	LED Floodlight
Type	:	Floodlight
Body Color	:	Grey
Lamp Shape	:	Non-Directional
Dimmable	:	Not-Dimmable
Light Source	:	LED
Warranty	:	2 Years
Class	:	CLASS I
IP	:	IP65

Product Characteristics

Wattage	:	300
Color Temperature	:	3IN1
Quse Lumen	:	33000
Color Rendering Index (CRI)	:	≥80
Energy Efficiency Level	:	E
Beam Angle	:	90º

Electrical Characteristics

Lifetime	:	20000 h
Voltage	:	220-240V 50/60Hz
Power Factor	:	>0,9
Material	:	Aluminium
Working Temperature	:	-20ºC ~ +40ºC

Dimensions & Weight

P. Length	:	505 mm
P. Width	:	375 mm
P. Height	:	29 mm
Weight	:	2770 gr

Package Informations

N.W.	:	5,54 kgs
G.W.	:	6,35 kgs
PCS/CTN	:	2
Length	:	40 cm
Width	:	9 cm
Height	:	54 cm
EAN	:	5949097743238

BRAYTRON SRL

MUNICIPIUL BUCUREȘTI, SECTOR 6, BLD. IULIU MANIU, NR.616, CORP B, ET.1, Sector 6, București
info@braytron.com
www.braytron.com