Braytron

FISA TEHNICA

MODEL	BT60-53080
DESCRIERE	BRY-FLOOD-WF-30W-WHT-3IN1-IP65-LED FLOODLIGHT





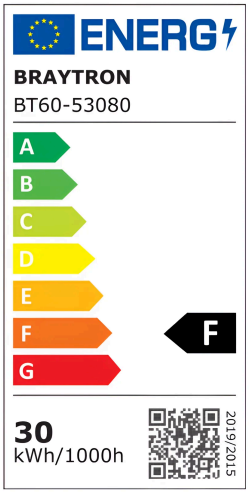

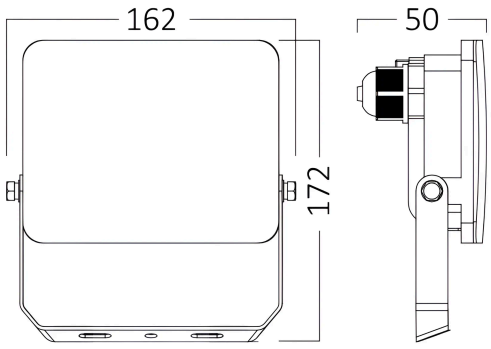

BRAYTRON SRL

MUNICIPIUL BUCUREȘTI, SECTOR 6, BLD. IULIU MANIU, NR.616, CORP B, ET.1, Sector 6, București
info@braytron.com
www.braytron.com

Braytron

FISA TEHNICA

General Characteristics

Model No	:	BT60-53080
Main Family	:	Outdoor Lighting
Sub Family	:	LED Floodlight
Type	:	Floodlight
Body Color	:	White
Lamp Shape	:	Non-Directional
Dimmable	:	Not-Dimmable
Light Source	:	LED
Warranty	:	2 Years
Class	:	CLASS I
IP	:	IP65
IK	:	IK05

Product Characteristics

Wattage	:	30
Color Temperature	:	3IN1
Quse Lumen	:	2850
Color Rendering Index (CRI)	:	≥70
Energy Efficiency Level	:	F
Beam Angle	:	120^{0}

Electrical Characteristics

Lifetime	:	20000 h
Voltage	:	220-240V 50/60Hz
Power Factor	:	>0,9
Material	:	Aluminium
Working Temperature	:	-20^{0}C ~ $+40^{0}$C

Dimensions & Weight

P. Length	:	162 mm
P. Width	:	50 mm
P. Height	:	172 mm
Weight	:	265 gr

Package Informations

N.W.	:	7,95 kgs
G.W.	:	9,7 kgs
PCS/CTN	:	30
Length	:	37,5 cm
Width	:	32,5 cm
Height	:	35 cm
EAN	:	5949097739590

BRAYTRON SRL

MUNICIPIUL BUCUREȘTI, SECTOR 6, BLD. IULIU MANIU, NR.616, CORP B, ET.1, Sector 6, București
info@braytron.com
www.braytron.com