# Braytron

## FISA TEHNICA

| | |
|---|---|
| MODEL | BT65-03082 |
| DESCRIERE | BRY-FLOOD-PF-30W-GRY-3IN1-IP65-LED FLOODLIGHT |







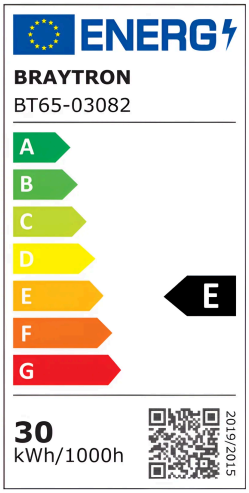


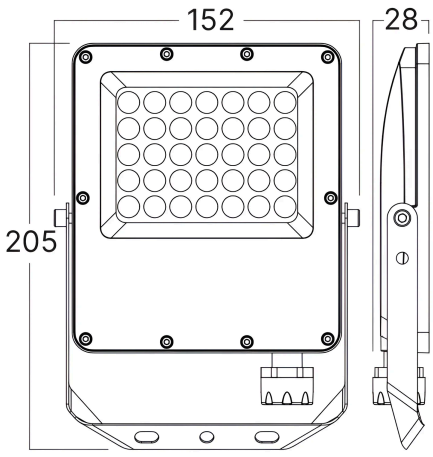


BRAYTRON SRL

MUNICIPIUL BUCUREȘTI, SECTOR 6, BLD. IULIU MANIU, NR.616, CORP B, ET.1, Sector 6, București
info@braytron.com
www.braytron.com

Braytron

FISA TEHNICA

## General Characteristics

| | | |
|---|---|---|
| Model No | : | BT65-03082 |
| Main Family | : | Outdoor Lighting |
| Sub Family | : | LED Floodlight |
| Type | : | Floodlight |
| Body Color | : | Grey |
| Lamp Shape | : | Non-Directional |
| Dimmable | : | Not-Dimmable |
| Light Source | : | LED |
| Warranty | : | 2 Years |
| Class | : | CLASS I |
| IP | : | IP65 |

## Product Characteristics

| | | |
|---|---|---|
| Wattage | : | 30 |
| Color Temperature | : | 3IN1 |
| Quse Lumen | : | 3300 |
| Color Rendering Index (CRI) | : | ≥80 |
| Energy Efficiency Level | : | E |
| Beam Angle | : | $90^0$ |

## Electrical Characteristics

| | | |
|---|---|---|
| Lifetime | : | 20000 h |
| Voltage | : | 220-240V 50/60Hz |
| Power Factor | : | >0,9 |
| Material | : | Aluminium |
| Working Temperature | : | $-20^0$C ~ $+40^0$C |

## Dimensions & Weight

| | | |
|---|---|---|
| P. Length | : | 205 mm |
| P. Width | : | 149 mm |
| P. Height | : | 26 mm |
| Weight | : | 350 gr |

## Package Informations

| | | |
|---|---|---|
| N.W. | : | 7 kgs |
| G.W. | : | 8,2 kgs |
| PCS/CTN | : | 20 |
| Length | : | 32 cm |
| Width | : | 31 cm |
| Height | : | 23 cm |
| EAN | : | 5949097743191 |

BRAYTRON SRL

MUNICIPIUL BUCUREȘTI, SECTOR 6, BLD. IULIU MANIU, NR.616, CORP B, ET.1, Sector 6, București
info@braytron.com
www.braytron.com