Braytron

FISA TEHNICA

MODEL	BT65-25082
DESCRIERE	BRY-FLOOD-PF-50W-GRY-3IN1-SNS-IP54-LED FLOODLIGHT





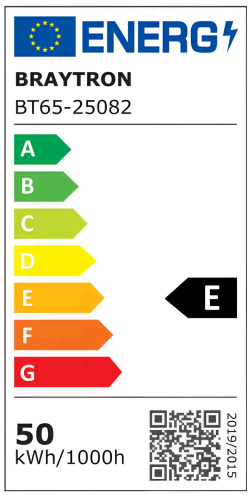

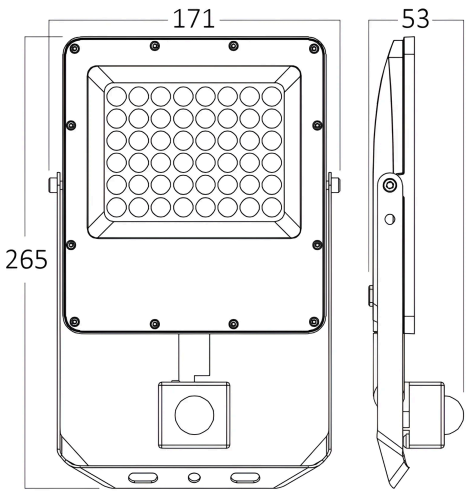

BRAYTRON SRL

MUNICIPIUL BUCUREȘTI, SECTOR 6, BLD. IULIU MANIU, NR.616, CORP B, ET.1, Sector 6, București
info@braytron.com
www.braytron.com

Braytron

FISA TEHNICA

General Characteristics

Model No	:	BT65-25082
Main Family	:	Outdoor Lighting
Sub Family	:	LED Floodlight
Type	:	Floodlight
Body Color	:	Grey
Lamp Shape	:	Non-Directional
Dimmable	:	Not-Dimmable
Light Source	:	LED
Warranty	:	2 Years
Class	:	CLASS I
IP	:	IP54

Product Characteristics

Wattage	:	50
Color Temperature	:	3IN1
Quse Lumen	:	5500
Color Rendering Index (CRI)	:	≥80
Energy Efficiency Level	:	E
Beam Angle	:	90^{0}

Electrical Characteristics

Lifetime	:	20000 h
Voltage	:	220-240V 50/60Hz
Power Factor	:	>0,9
Material	:	Aluminium
Working Temperature	:	$-20^{0}C$ ~ $+40^{0}C$

Battery Informations

View Distance	:	≤8 mt

Dimensions & Weight

P. Length	:	265 mm
P. Width	:	171 mm
P. Height	:	53 mm
Weight	:	515 gr

Sensor Informations

Sensor Type	:	Motion
Detection Distance	:	≤8 mt
Detection Angle	:	120° Degrees
Detection Speed	:	0,6-1,5m/s
Installation Height	:	2-3 mt
Time Delay	:	10sec-10min
Lux	:	10-2000 lux

Package Informations		
N.W.	:	10,3 kgs
G.W.	:	12,6 kgs
PCS/CTN	:	20
Length	:	59,5 cm
Width	:	36,5 cm
Height	:	30 cm
EAN	:	5949097743269