Braytron

FISA TEHNICA

MODEL	BH16-09281
DESCRIERE	BRY-LINA-PD-2540-RND-BLC-45W-3IN1-CEILING LIGHT



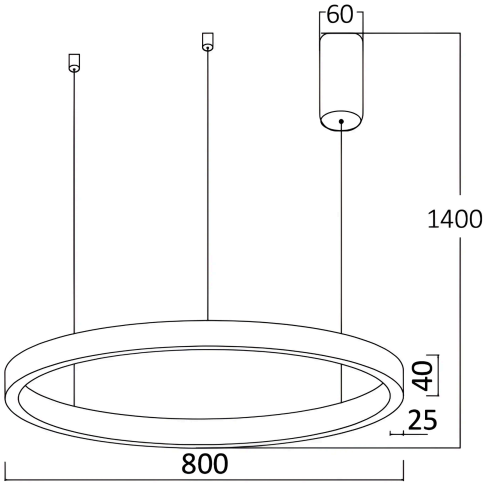



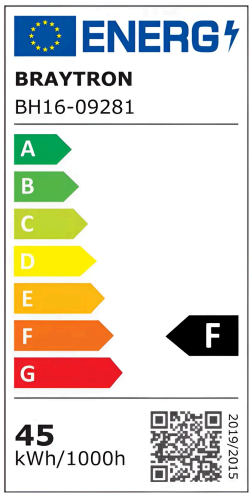

BRAYTRON SRL

MUNICIPIUL BUCUREȘTI, SECTOR 6, BLD. IULIU MANIU, NR.616, CORP B, ET.1, Sector 6, București
info@braytron.com
www.braytron.com

Braytron

FISA TEHNICA

General Characteristics

Model No	:	BH16-09281
Main Family	:	Decorative LED
Sub Family	:	Pendant Light Lina
Type	:	Pendant
Body Color	:	Black
Lamp Shape	:	Non-Directional
Dimmable	:	Not-Dimmable
Light Source	:	LED
Warranty	:	3 Years
Class	:	CLASS I
IP	:	IP20

Product Characteristics

Wattage	:	45
Color Temperature	:	3IN1
Quse Lumen	:	3880
Color Rendering Index (CRI)	:	≥80
Energy Efficiency Level	:	F
Beam Angle	:	120^{0}

Electrical Characteristics

Lifetime	:	20000 h
Voltage	:	220-240V 50/60Hz
Power Factor	:	>0,9
Material	:	Aluminium-PC
Working Temperature	:	-20^{0}C ~ $+40^{0}$C

Dimensions & Weight

Diameter	:	800 mm
P. Height	:	1400 mm
Weight	:	2040 gr

Package Informations

N.W.	:	2 kgs
G.W.	:	4,5 kgs
PCS/CTN	:	1
Length	:	84,5 cm
Width	:	84,5 cm
Height	:	8,5 cm
EAN	:	5949097720079

BRAYTRON SRL

MUNICIPIUL BUCUREȘTI, SECTOR 6, BLD. IULIU MANIU, NR.616, CORP B, ET.1, Sector 6, București
info@braytron.com
www.braytron.com