Braytron

FISA TEHNICA

MODEL	BT27-00101
DESCRIERE	BRY-INDUS-R120-GU10-IP67-UNDERGROUND FIXTURE





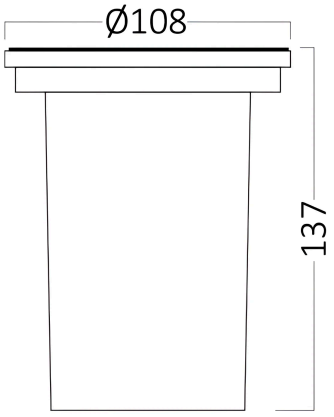



BRAYTRON SRL

MUNICIPIUL BUCUREȘTI, SECTOR 6, BLD. IULIU MANIU, NR.616, CORP B, ET.1, Sector 6, București
info@braytron.com
www.braytron.com

Braytron

FISA TEHNICA

General Characteristics

Model No	:	BT27-00101
Main Family	:	Outdoor Lighting
Sub Family	:	Underground Light
Type	:	Undergraund Light
Body Color	:	Nickle
Socket	:	GU10
Warranty	:	2 Years
Class	:	CLASS I
IP	:	IP67
IK	:	IK08

Product Characteristics

Max. wattage	:	Max.1×35 w

Electrical Characteristics

Voltage	:	220-240V 50/60Hz
Material	:	Aluminium-304SS
Working Temperature	:	-20^{0}C ~ +40^{0}C

Dimensions & Weight

Diameter	:	108 mm
P. Height	:	137 mm
Weight	:	565 gr

Package Informations

N.W.	:	5,2 kgs
G.W.	:	6,15 kgs
PCS/CTN	:	10
Length	:	59 cm
Width	:	17 cm
Height	:	25 cm
EAN	:	5949097730238