Braytron

FISA TEHNICA

MODEL	BT60-95031
DESCRIERE	BRY-FLOOD-WL-BLC-50W-6500K-WORK LIGHT



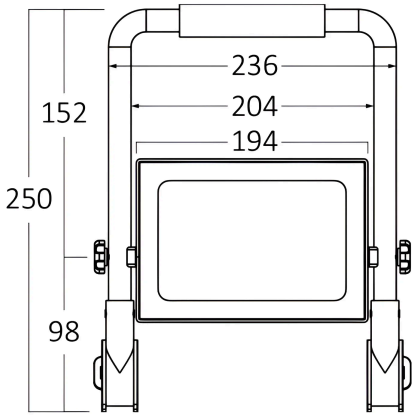

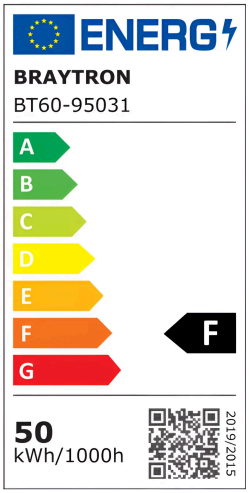

BRAYTRON SRL

MUNICIPIUL BUCUREȘTI, SECTOR 6, BLD. IULIU MANIU, NR.616, CORP B, ET.1, Sector 6, București
info@braytron.com
www.braytron.com

Braytron

FISA TEHNICA

General Characteristics

Model No	:	BT60-95031
Main Family	:	Outdoor Lighting
Sub Family	:	LED Worklight
Type	:	Work Light
Body Color	:	Black+Yellow
Lamp Shape	:	Directional
Dimmable	:	Not-Dimmable
Light Source	:	LED
Warranty	:	2 Years
Class	:	Class I
IP	:	IP65

Product Characteristics

Wattage	:	50
Color Temperature	:	6500K
Quse Lumen	:	4200
Color Rendering Index (CRI)	:	≥70
Energy Efficiency Level	:	F
Beam Angle	:	120^{0}

Electrical Characteristics

Lifetime	:	20000 h
Voltage	:	220-240V 50/60Hz
Power Factor	:	>0,9
Material	:	Aluminium
Working Temperature	:	-20^{0}C ~ $+40^{0}$C

Dimensions & Weight

P. Length	:	250 mm
P. Width	:	236 mm
Weight	:	1050 gr

Package Informations

N.W.	:	8,40 kgs
G.W.	:	9,70 kgs
PCS/CTN	:	8
Length	:	545 mm
Width	:	270 mm
Height	:	275 mm
EAN	:	5949097731747

BRAYTRON SRL

MUNICIPIUL BUCUREȘTI, SECTOR 6, BLD. IULIU MANIU, NR.616, CORP B, ET.1, Sector 6, București
info@braytron.com
www.braytron.com