Braytron

FISA TEHNICA

MODEL	BG36-00592
DESCRIERE	BRY-SPIKE-12W-GRY-RGB-IP65-SPIKE LIGHT





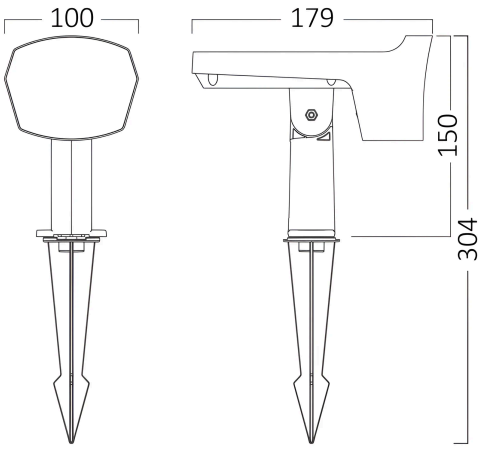



BRAYTRON SRL

MUNICIPIUL BUCUREȘTI, SECTOR 6, BLD. IULIU MANIU, NR.616, CORP B, ET.1, Sector 6, București
info@braytron.com
www.braytron.com

Braytron

FISA TEHNICA

General Characteristics

Model No	:	BG36-00592
Main Family	:	Solar Lighting
Sub Family	:	Solar Spike Light
Type	:	Solar Spike Light
Body Color	:	Dark Grey
Lamp Shape	:	Directional
Dimmable	:	Dimmable
Light Source	:	LED
Warranty	:	2 Years
Class	:	CLASS III
IP	:	IP65

Product Characteristics

Wattage	:	12
Color Temperature	:	RGB
Color Rendering Index (CRI)	:	≥80
Beam Angle	:	38^0

Electrical Characteristics

Lifetime	:	20000 h
Capacity Watt	:	5.5V, 1.8W
Material	:	PA+PC
Working Temperature	:	-20^0C ~ $+40^0$C
Working Time	:	18 Hours

Battery Informations

Battery	:	Li-Ion Battery
Charging Time	:	10-12 Hours
Battery Capacity	:	3.7V 2x1800mAH

Dimensions & Weight

P. Length	:	179 mm
P. Width	:	100 mm
P. Height	:	304 mm
Weight	:	440 gr

Solar Informations

Solar Power	:	5.5V, 1.8W
Solar Panel	:	5.5V, 1.8w

Package Informations		
N.W.	:	8,7 kgs
G.W.	:	10,8 kgs
PCS/CTN	:	20
Length	:	55 cm
Width	:	38,5 cm
Height	:	21,5 cm
EAN	:	5949097739293