Braytron

FISA TEHNICA

MODEL	BG36-00281
DESCRIERE	BRY-SOLARIS-W2-BLC-15W-3IN1-IP54-SOLAR WALL LIGHT





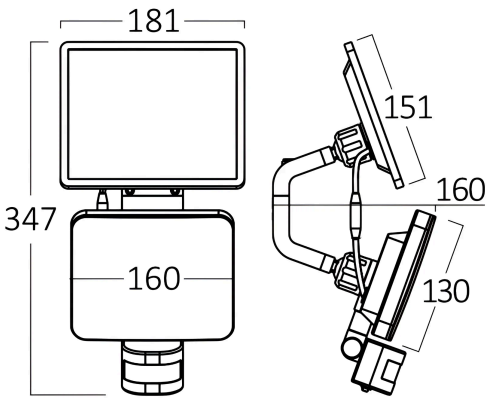



BRAYTRON SRL

MUNICIPIUL BUCUREȘTI, SECTOR 6, BLD. IULIU MANIU, NR.616, CORP B, ET.1, Sector 6, București
info@braytron.com
www.braytron.com

Braytron

FISA TEHNICA

General Characteristics

Model No	:	BG36-00281
Main Family	:	Solar Lighting
Sub Family	:	Solar Wall Light
Type	:	Solar
Body Color	:	Black
Dimmable	:	Not-Dimmable
Light Source	:	LED
Warranty	:	2 Years
Class	:	CLASS III
IP	:	IP54
IK	:	IK04

Product Characteristics

Wattage	:	15
Color Temperature	:	3IN1
Quse Lumen	:	1500
Color Rendering Index (CRI)	:	≥80
Beam Angle	:	120^{0}

Electrical Characteristics

Lifetime	:	20000 h
Voltage	:	Solar Panel Energy
Capacity Watt	:	8 w
Material	:	ABS+PC
Working Temperature	:	-20^{0}C ~ $+40^{0}$C
Working Time	:	18 Hours

Battery Informations

Battery	:	Li-Ion Battery
Charging Time	:	8-10 Hours
View Distance	:	≤10 mt
Battery Capacity	:	3.7V 4000 mA

Dimensions & Weight

P. Length	:	181 mm
P. Width	:	181 mm
P. Height	:	347 mm
Weight	:	820 gr

Sensor Informations

Sensor Type	:	Motion
Detection Distance	:	≤10 mt
Detection Angle	:	160° Degrees
Installation Height	:	2-3 mt
Time Delay	:	10 sec.-60 sec.
Lux	:	10-1000 lux

Solar Informations		
Solar Power	:	8 w
Solar Panel	:	8 w

Package Informations		
N.W.	:	8,2 kgs
G.W.	:	9,8 kgs
PCS/CTN	:	10
Length	:	62 cm
Width	:	39 cm
Height	:	20 cm
EAN	:	5949097737695