Braytron

FISA TEHNICA

MODEL	BG43-02302
DESCRIERE	BRY-DALLAS-800-7W-3000K-IP54-LED BOLLARD



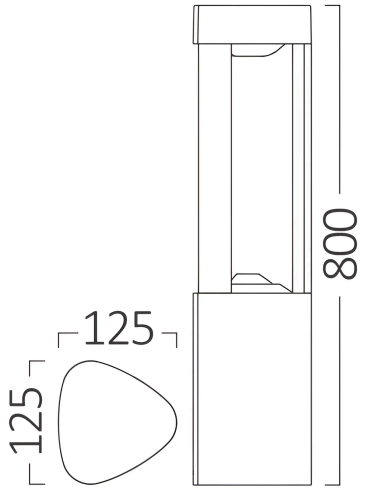

GARAN

Braytron BG43-02302

3

365

BG Гаранция от производителя в години | **CS** Záruka výrobce v letech | **DA** Producentgarantiens varighed i år | **DE** Herstellergarantie in Jahren | **EL** Εγγύηση παραγωγού σε έτη | **EN** Producer guarantee in years | **ES** Garantía del productor en años | **ET** Tootja garantii aastates | **FI** Tuottajan takuu vuosina | **FR** Garantie du producteur en années | **GA** Ráthaíocht an táirgeora de réir blianta | **HR** Jamstvo proizvođača u godinama | **HU** Gyártói jótállás években | **IT** Garanzia del produttore in anni | **LT** Gamintojo garantija metais | **LV** Ražotāja garantija gados | **MT** Garanzija tal-produttur fi snin | **NL** Producentengarantie in jaren | **PL** Gwarancja producenta w latach | **PT** Garantia do produtor em anos | **RO** Garanția producătorului în ani | **SK** Záruka výrobcu v rokoch | **SL** Garancija proizvajalca v letih | **SV** Tillverkarens garanti i antal år

ENERG

BRAYTRON

BG43-02302

A
B
C
D
E
F
G

F

7 kWh/1000h

2019/2015

BRAYTRON SRL

MUNICIPIUL BUCUREȘTI, SECTOR 6, BLD. IULIU MANIU, NR.616, CORP B, ET.1, Sector 6, București
info@braytron.com
www.braytron.com

Braytron

FISA TEHNICA

General Characteristics

Model No	:	BG43-02302
Main Family	:	Outdoor Lighting
Sub Family	:	LED Bollard
Type	:	Bollard
Body Color	:	Grey
Lamp Shape	:	Non-Directional
Dimmable	:	Not-Dimmable
Light Source	:	LED
Warranty	:	3 Years
Class	:	CLASS I
IP	:	IP54
IK	:	IK08

Product Characteristics

Wattage	:	7
Color Temperature	:	3000K
Quse Lumen	:	300
Color Rendering Index (CRI)	:	≥80
Energy Efficiency Level	:	F
Beam Angle	:	120^{0}

Electrical Characteristics

Lifetime	:	20000 h
Voltage	:	220-240V 50/60Hz
Power Factor	:	>0,5
Material	:	Aluminium-PC
Working Temperature	:	-20^{0}C ~ $+40^{0}$C

Dimensions & Weight

P. Length	:	125 mm
P. Width	:	125 mm
P. Height	:	800 mm
Weight	:	1850 gr

Package Informations

N.W.	:	7,4 kgs
G.W.	:	9,2 kgs
PCS/CTN	:	4
Length	:	83 cm
Width	:	29 cm
Height	:	30 cm
EAN	:	5949097705649

BRAYTRON SRL

MUNICIPIUL BUCUREȘTI, SECTOR 6, BLD. IULIU MANIU, NR.616, CORP B, ET.1, Sector 6, București
info@braytron.com
www.braytron.com